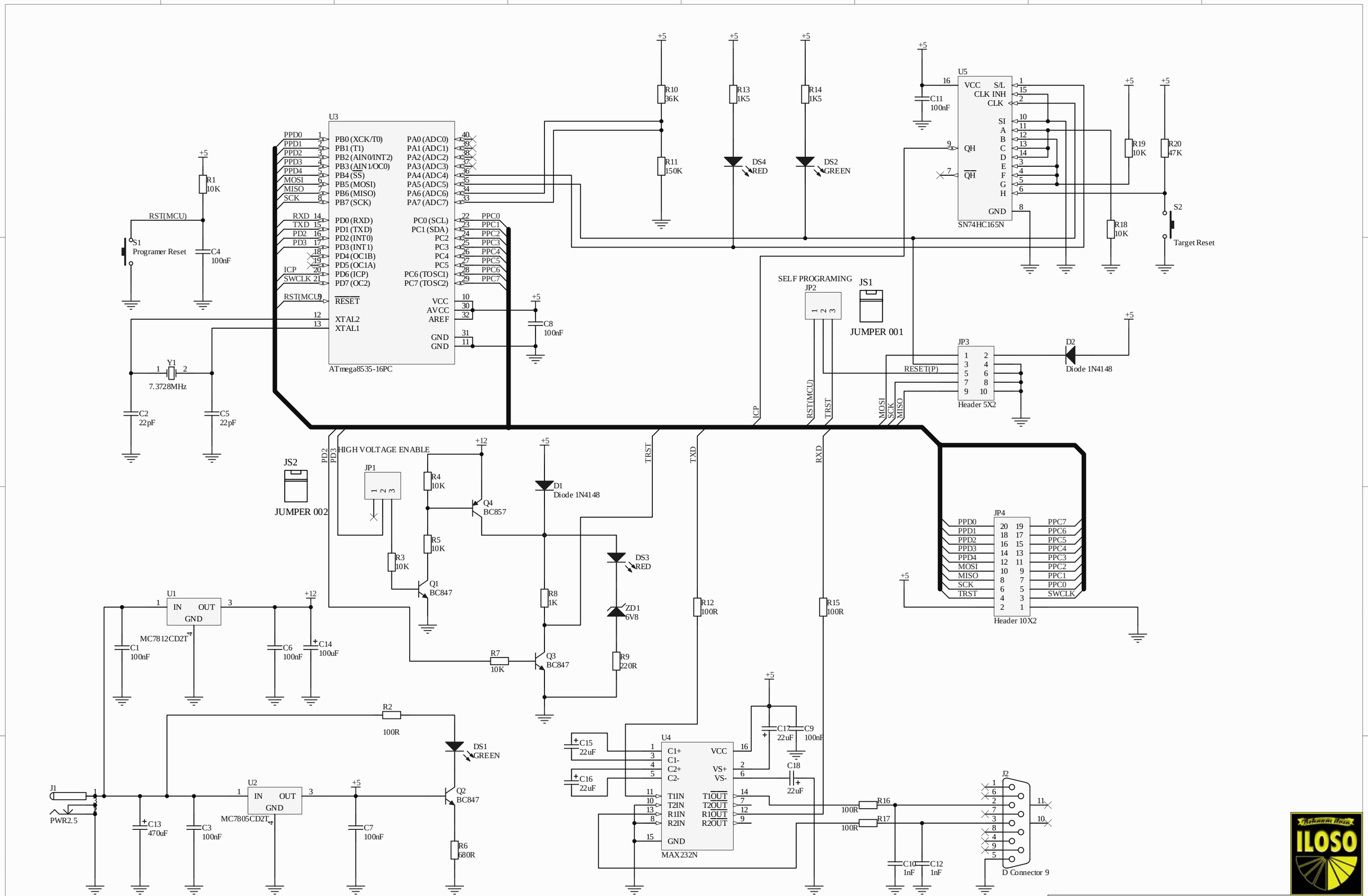

Behnam Escandariun

Digitally signed by Behnam Escandariun
DN: cn=Behnam Escandariun, c=IR, o=ILOSO, ou=BNSK, email=ILOSO95@YAHOO.COM
Reason: I am the author of this document
Date: 2006.04.06 09:34:25 +04'30'

Title	STK 500 HV PARALEL PROGARMER	
Size A3	Number 060406ODST	Revision 1.02
Date: 2006/04/06	Sheet of 1 OF 1	
File: G:\DXP\..\HVPROG.SCHDOC	Drawn By: Behnam Escandariun	